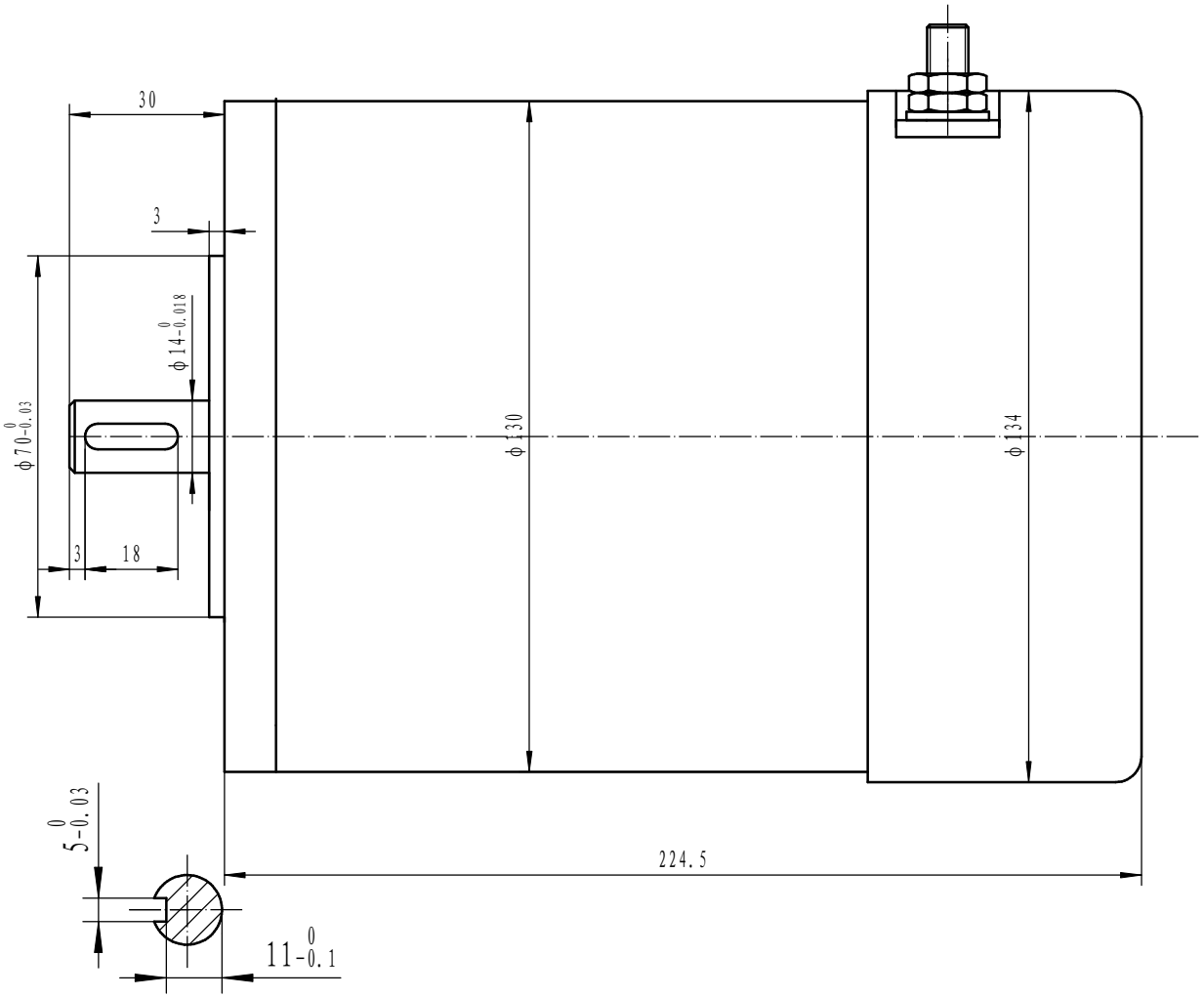

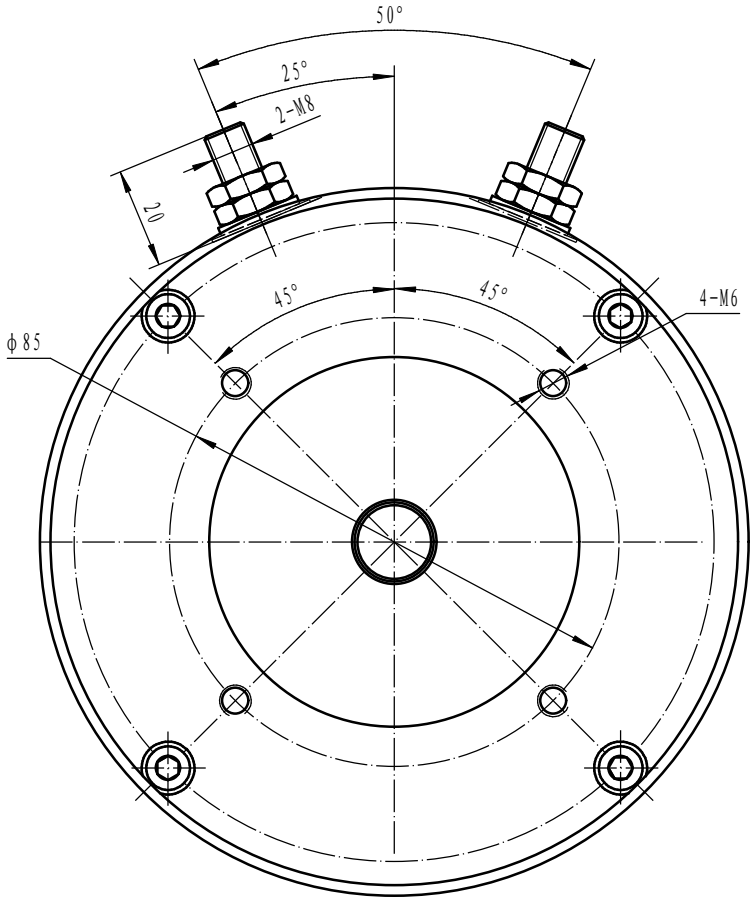

Model	Power(W)	Duty	Voltage(V)	Speed(rpm)	L
EC600.120-71B14(130ZYT)	600/800	S1/S2 30′	12	3000	224.5

130ZYT-71B14

PMDC MOTOR

1:1